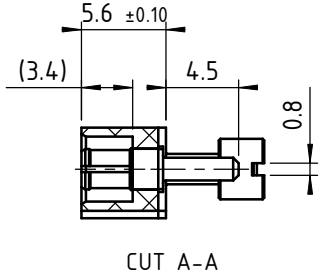

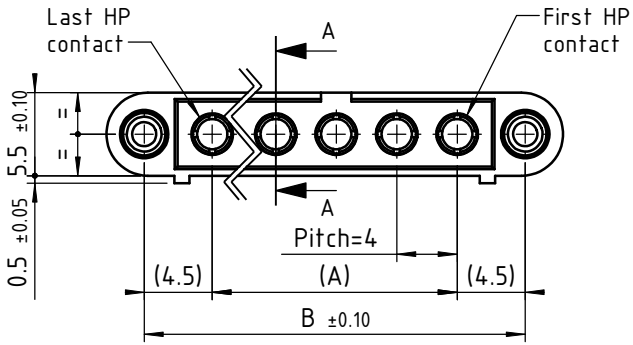

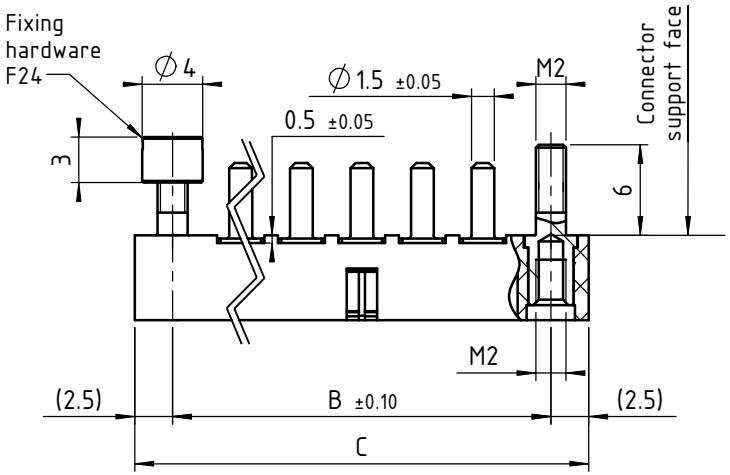

Recommended PCB layout:

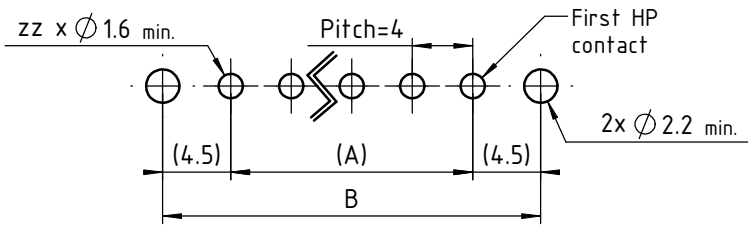

CMM Series 220 MALE

HP contacts number zz	Distance between axies		Length in mm
	A	B	C
02	4	13	18
03	8	17	22
04	12	21	26
05	16	25	30
06	20	29	34
07	24	33	38
08	28	37	42
09	32	41	46
10	36	45	50
11	40	49	54
12	44	53	58
13	48	57	62
14	52	61	66
15	56	65	70

TECHNICALS FEATURES

MATERIALS

INSULATOR : Special PPS (Polyphenylene sulphide fibreglass filled thermoplastic) UL 94-V0

- Radiation resistance
- No humidity absorption
- Oxygen free

Note : PPS characteristics are recognized for space applications

FIXING HARDWARE :

- **Jackscrew :** Stainless steel

TECHNICAL FEATURES for 30 HP CONTACTS

MATERIAL

- **Body** — Copper alloy / Ni + Au 0.5µ

MECHANICAL

- **Endurance** — 500 cycles min up to 2500.
- **Insertion force** — From 0.60 to 5N per contact
- **Extraction force** — From 0.50 to 2N per contact
- **Secure overlapping** — 1.30 mm

ELECTRICAL

- **Intensity** — 20 A
- **Contact resistance** — max. 6 mΩ
- **Maximum voltage (sea level)** — 1000V (RMS)
- **Operating voltage (sea level)** — 180 V AC/500 mA

ENVIRONMENTAL

- **Temperature range** — From –60℃ to +260℃
- **Vibration severity** — 0.75mm, 10 g RMS 6 hours long random with superimposed sinusoid. No intermittencies measured when using an H.S.L.I. (High Speed Logic Interrupt) detector with a trip threshold of 2 ns.
- **Shock severity** — 100g for 6 ms
- **Solvent resistance** — HcFc 141 bMGX (ATOCHEM) solvent
- **Salt spray test** — 96 hrs
- **Humidity test** — 56 days @ 90% humidity

3D view
scale: 1.5:1

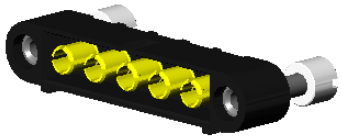

Marking as referenced in the CMM catalogue pages 12 & 13

NICOMATIC
www.nicomatic.com
Mail : nicomatic@nicomatic.fr
Tel : +33 (0)4.50.36.13.85

Iss	Date	Drawn	Checked	Approved
2	25/01/11	N.P.	A.V.	E.M.

Item : Connector CMM220 male straight on PCB, zz HP contacts 30-3300-45, F24

Tools recommended	
Screwdriver for standard nut	C14743

Folder : X:\Méthodes\Plans clients\Plans clients 2D\10 - CMM220\Connecteurs mâles\221D\221D00F24-00zz-330045_cl

This document and drawings, sketches, and schematic drawings are the property of the NICOMATIC company. and no parts thereof may be reproduced and used without the written consent of the owner. Law dated 11.03.1902

Catalogue Reference : 221D00F24-00zz-330045

General tolerance ±0.2 | Scale 2:1 | Page 1/1

A4